MLOC-F1XM-4

HELIAX® M-LOC Multiport cluster 4 ports SureFlex® cable assembly with interface type M-LOC latching male,size 1/4", variable length

Product Classification

Product Type	HELIAX® MLOC cluster, SureFlex® D-CLASS, dynamic PIM
Product Brand	HELIAX® | SureFlex®
Product Series	MLOC

General Specifications

Attachment, Connector A	Factory attached
Body Style, Connector A	Straight
Interface, Connector A	M-LOC Male

Dimensions

Nominal Size	1/4 in

Outline Drawing

©2024 CommScope, Inc. All rights reserved. CommScope and the CommScope logo are registered trademarks of CommScope and/or its affiliates in the U.S. and other countries. For additional trademark information see https://www.commscope.com/trademarks. All product names, trademarks and registered trademarks are property of their respective owners. Revised: March 13, 2024

MLOC-F1XM-4

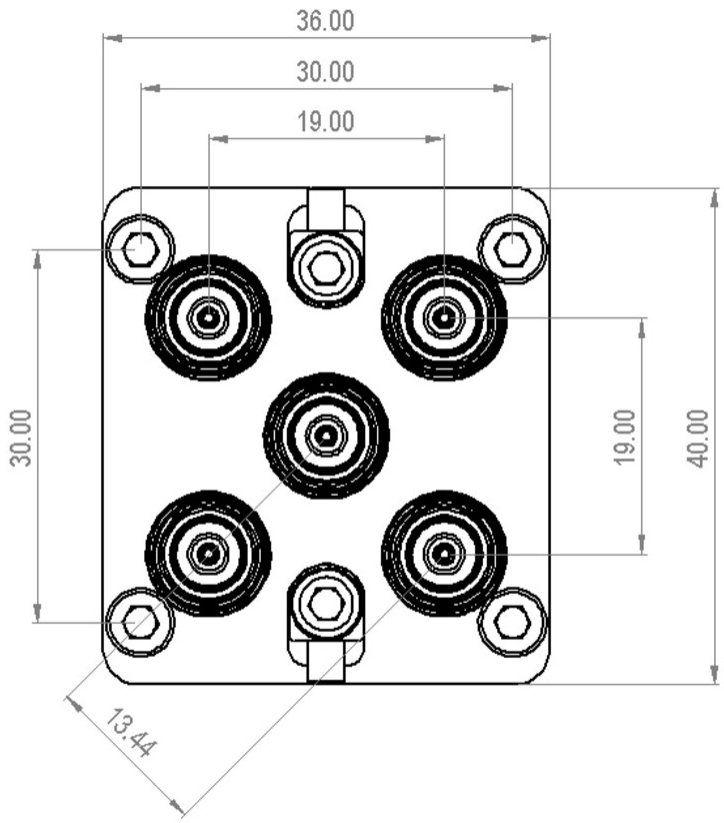

Electrical Specifications

3rd Order IMD at Frequency	-119 dBm @ 1800 MHz
3rd Order IMD Test Method	Two +43 dBm carriers

VSWR/Return Loss

Frequency Band	Gated VSWR	Gated Return Loss (dB)
1000–3000 MHz	1.07	30
3000–4200 MHz	1.11	26
4200–5000 MHz	1.12	25

Mechanical Specifications

Minimum Bend Radius, multiple Bends	25.4 mm | 1 in
Minimum Bend Radius, single Bend	25.4 mm | 1 in

©2024 CommScope, Inc. All rights reserved. CommScope and the CommScope logo are registered trademarks of CommScope and/or its affiliates in the U.S. and other countries. For additional trademark information see https://www.commscope.com/trademarks. All product names, trademarks and registered trademarks are property of their respective owners. Revised: March 13, 2024

MLOC-F1XM-4

Environmental Specifications

Installation temperature	-40 °C to +60 °C (-40 °F to +140 °F)
Operating Temperature	-55 °C to +85 °C (-67 °F to +185 °F)
Storage Temperature	-55 °C to +85 °C (-67 °F to +185 °F)
Immersion Test Method	IEC 60068-2-17

Regulatory Compliance/Certifications

Agency	Classification
ISO 9001:2015	Designed, manufactured and/or distributed under this quality management system

©2024 CommScope, Inc. All rights reserved. CommScope and the CommScope logo are registered trademarks of CommScope and/or its affiliates in the U.S. and other countries. For additional trademark information see https://www.commscope.com/trademarks. All product names, trademarks and registered trademarks are property of their respective owners. Revised: March 13, 2024