THIS DRAWING IS UNPUBLISHED. RELEASED FOR PUBLICATION -,- .
© 2016 Commscope, INC. Confidential NOTICE: These drawings and specifications are the proprietary property of COMMSCOPE, INC. and may be used only for the specific purpose authorized in writing by COMMSCOPE, INC.

REVISIONS					
P	LTR	DESCRIPTION	DATE	DWN	APVD
	D	REVISED PER ECN#8000019965	16FEB17	HSM	JCA

PART NUMBER	FIBER TYPE 1.1 2.2	MAX ATTENUATION (dB/km)				MINIMUM OVERFILLED LAUNCH BANDWIDTH (MHz*km)		MINIMUM EFFECTIVE MODAL BANDWIDTH (MHz*km)	MINIMUM 10 GIGABIT ETHERNET LINK DISTANCE (meters)	JACKET COLOR 1.3	FIBER SPECIFICATION
		850nm	1300nm	1310nm	1550nm	850nm	1300nm	850nm	850nm		
1777210–1	50/125 OM2	3.5	1.5	N/A	N/A	500	500	N/A	82	BLACK	TIA–492AAAB–XBBX7
1777210–2	62.5/125 OM1	3.5	1.2	N/A	N/A	200	500	N/A	33	BLACK	TIA–492AAAA–XBBXE
1777210–3	OM3	3.0	1.0	N/A	N/A	1500	500	2000	300	BLACK	TIA–492AAAC–XBBX
1777210–4	OS2 BIF	N/A	N/A	0.4	0.3	N/A	N/A	N/A	N/A	YELLOW	ITU–T G.657.A1 3.3
1777210–5	OM4	3.0	1.0	N/A	N/A	3500	500	4700	550	BLACK	TIA–492AAAD–XBBX
6–1777210–3	OS2 BIF	N/A	N/A	0.4	0.3	N/A	N/A	N/A	N/A	BLACK	ITU–T G.657.A1

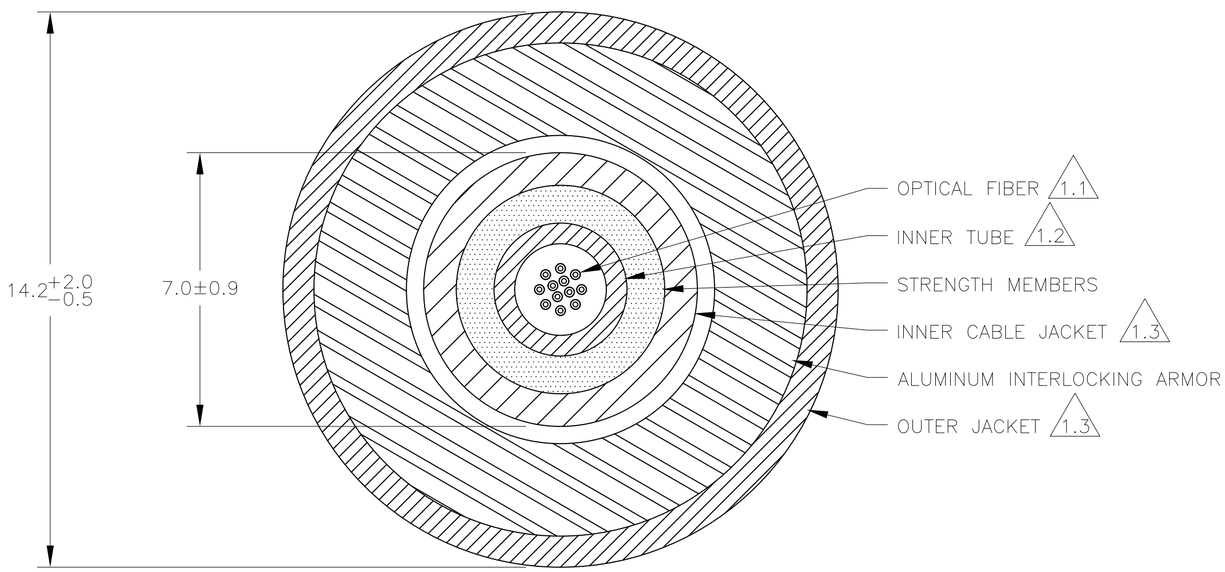

2.2 2.3 2.4 2.5

COMMSCOPE I/O 12 FIBER 62.5/125 OM1 OFCP–FT6 c(UL)us OFCP MM/YY SO XXXXXXXXX XXXXX FEET

LEGEND 2.1

1. CABLE CONSTRUCTION:

1.1 OPTICAL FIBER: 250±15µm
SEE TABLE FOR TYPE.
TO BE COLOR CODED PER TIA–598.
OM2, OM3, OM4 AND OS2 FIBER TYPES ARE BEND INSENSITIVE.

1.2 DRY WATER BLOCKED INNER TUBE:

1.3 THERMOPLASTIC OUTER JACKET:
SEE TABLE FOR COLOR. COLOR SPECIFICATION PER EIA–359.

2. LEGEND:

2.1 LEGEND REPEATED EVERY TWO FEET IN CONTRASTING COLOR INK.

2.2 SEE TABLE FOR APPROPRIATE LEGEND PRINTING.

2.3 MM/YY = MONTH/YEAR

2.4 SO XXXXXX = MANUFACTURER'S SHOP ORDER NUMBER.

2.5 XXXXX = SEQUENTIAL FOOT MARKING.

3. RATINGS:

3.1 UL OR ETL LISTED TYPE OFCP AND CSA FT6.

3.2 QUALIFIED TO ICEA–S–104–696 AND TELCORDIA GR–409–CORE.

3.3 THIS DASH NUMBER IS FOR INDOOR USE ONLY. BLACK JACKETED CABLE IS RECOMMENDED FOR OUTDOOR USE.

–	VALUE
OPERATION TEMPERATURE	–40°C TO 70°C
STORAGE TEMPERATURE	–40°C TO 70°C
INSTALLATION TEMPERATURE	0°C TO 60°C
MAX LOAD: INSTALL N (lb)	1335 (300)
MAX LOAD: OPERATION N (lb)	400 (90)
MIN BEND RADIUS: INSTALL mm (in)	324 (12.75)
MIN BEND RADIUS: OPERATION mm (in)	162 (6.37)
COMPRESSIVE STENGTH (1 Min) N/cm (lbf/in)	440 (250)
CABLE WEIGHT kg/km (lb/1000 ft)	225 (152)

1777210

THIS DRAWING IS A CONTROLLED DOCUMENT.

DIMENSIONS: mm

TOLERANCES UNLESS OTHERWISE SPECIFIED:
0 PLC ± –
1 PLC ± –
2 PLC ± –
3 PLC ± –
4 PLC ± –
ANGLES ± –

MATERIAL –
FINISH –

DWN A. BROUGHTON 27JUN13
CHK A. BROUGHTON 27JUN13
APVD D. CRAIG 27JUN13
PRODUCT SPEC —
APPLICATION SPEC —
WEIGHT —

COMMSCOPE, INC.

NAME CABLE, ILJA, INDOOR/OUTDOOR, DRY, OFCP, 12 FIBER
–
–

SIZE A2
DRAWING NO C–1777210
RESTRICTED TO —
CUSTOMER DRAWING
SCALE NTS
SHEET 1 OF 1
REV D