E15V85P05

Twin Dual Duplexer Shelf, 1900 RXAIT

OBSOLETE

This product was discontinued on: December 1, 2019

Product Classification

Product Type	Duplexer shelf

General Specifications

Application	Indoor
Antenna Interface	7-16 DIN Female
BTS Interface	7-16 DIN Female
Color	Black | Silver
Rack Type	EIA 19 in
Rack Units	1
Rx Interface	N Female
Rx2 Interface	SMA Female

Dimensions

Height	43.7 mm | 1.72 in
Width	482.6 mm | 19 in
Depth	226 mm | 8.898 in

©2023 CommScope, Inc. All rights reserved. CommScope and the CommScope logo are registered trademarks of CommScope and/or its affiliates in the U.S. and other countries. For additional trademark information see https://www.commscope.com/trademarks. All product names, trademarks and registered trademarks are property of their respective owners. Revised: November 16, 2023

E15V85P05

Outline Drawing

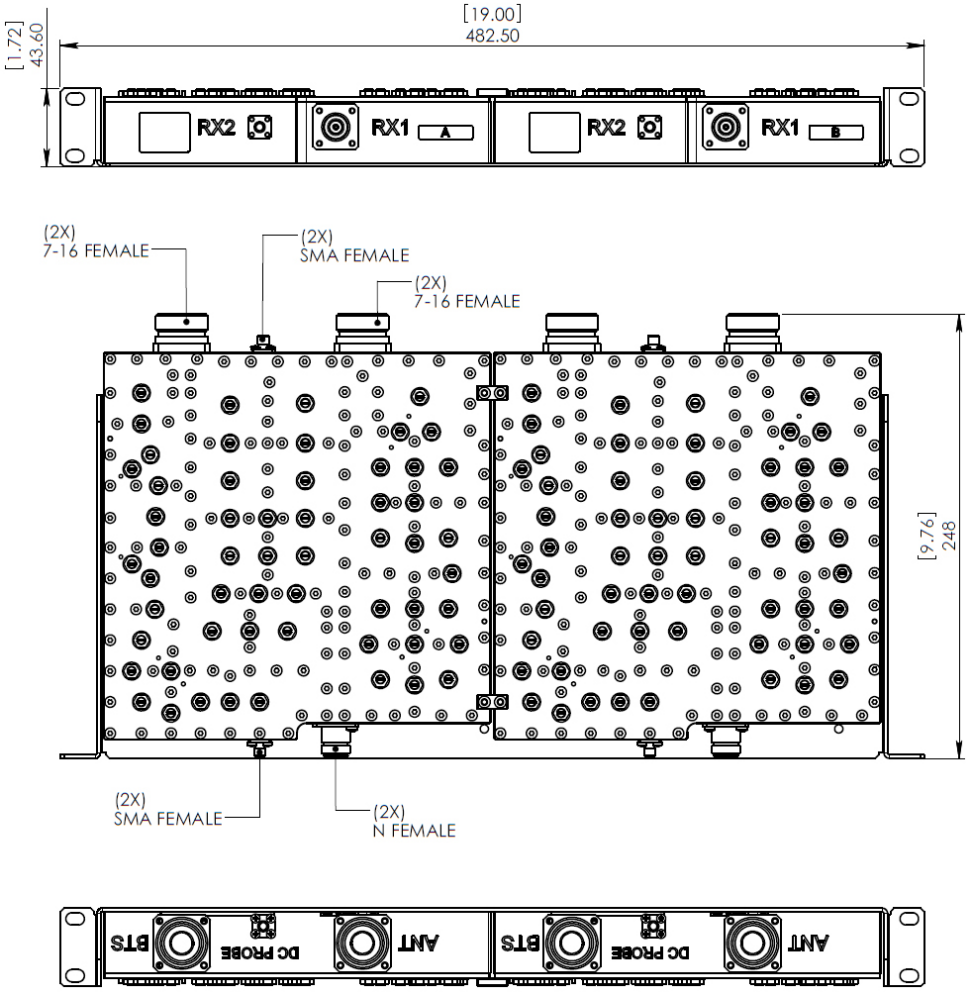

Electrical Specifications

3rd Order IMD Test Method	Two +43 dBm carriers
3rd Order IMD, maximum	-150 dBm
dc Interface	SMA Female
dc Pass-through	Rx
License Band	PCS

Electrical Specifications, Rx (Uplink)

Band Rejection at Operating Frequency	30 dB @ 1805–1830 MHz | 60 dB @ 200–1000 MHz | 63 dB @ 1785–1805 MHz | 70 dB @ 1000–1785 MHz | 77 dB @ 1990–2170 MHz
Bandwidth	60 MHz

©2023 CommScope, Inc. All rights reserved. CommScope and the CommScope logo are registered trademarks of CommScope and/or its affiliates in the U.S. and other countries. For additional trademark information see https://www.commscope.com/trademarks. All product names, trademarks and registered trademarks are property of their respective owners. Revised: November 16, 2023

Frequency Band	1850 – 1910 MHz
Group Delay Variation at Frequency, maximum	50 ns @ 5.00 MHz
Insertion Loss, maximum	1 dB
Insertion Loss, typical	0.5 dB
Return Loss, minimum	18 dB
Total Group Delay, maximum	100 ns
Tx Band Rejection	90 dB

Electrical Specifications 2, Rx (Uplink)

Bandwidth	60 MHz
Frequency Band	1850 – 1910 MHz
Group Delay Variation at Frequency, maximum	50 ns @ 5.00 MHz
Total Group Delay, maximum	100 ns
Tx Band Rejection	80 dB
Insertion Loss, maximum	1 dB
Insertion Loss, typical	0.5 dB
Return Loss, minimum	18 dB

Electrical Specifications, Tx (Downlink)

Bandwidth	60 MHz
Frequency Band	1930 – 1990 MHz
Group Delay Variation at Frequency, maximum	50 ns @ 5.00 MHz
Input Power, PEP, maximum	3000 W
Input Power, RMS, maximum	300 W
Rx Band Rejection	80 dB
Total Group Delay, maximum	100 ns
Insertion Loss, maximum	1 dB
Insertion Loss, typical	0.4 dB
Return Loss, minimum	18 dB

Block Diagram

©2023 CommScope, Inc. All rights reserved. CommScope and the CommScope logo are registered trademarks of CommScope and/or its affiliates in the U.S. and other countries. For additional trademark information see https://www.commscope.com/trademarks. All product names, trademarks and registered trademarks are property of their respective owners. Revised: November 16, 2023

E15V85P05

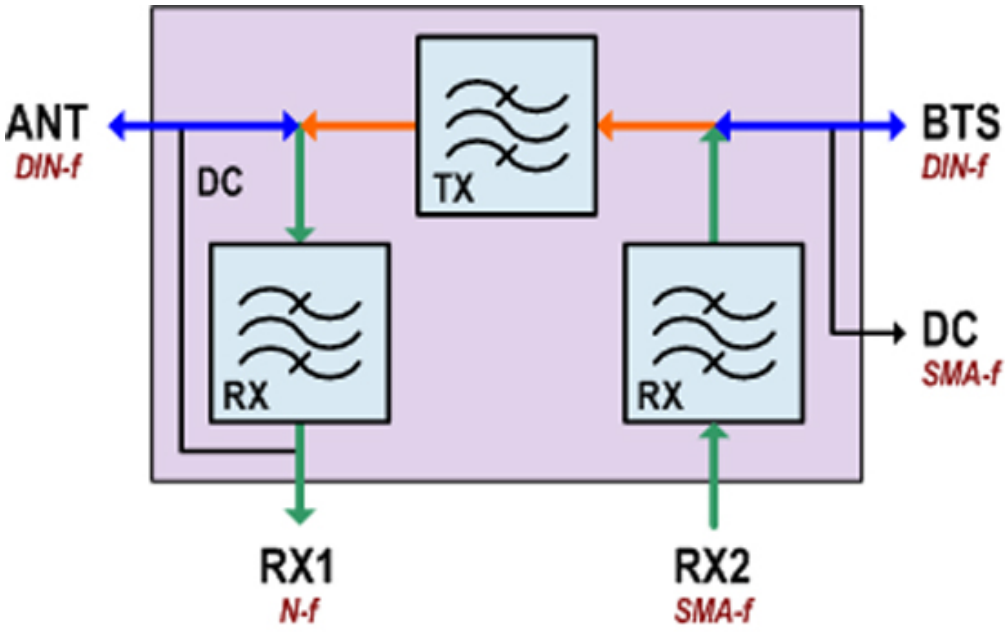

Environmental Specifications

Operating Temperature	0 °C to +50 °C (+32 °F to +122 °F)
Ingress Protection Test Method	IEC 60529:2001, IP30

Packaging and Weights

Weight, without mounting hardware	6.8 kg | 14.991 lb

©2023 CommScope, Inc. All rights reserved. CommScope and the CommScope logo are registered trademarks of CommScope and/or its affiliates in the U.S. and other countries. For additional trademark information see https://www.commscope.com/trademarks. All product names, trademarks and registered trademarks are property of their respective owners. Revised: November 16, 2023