NOTES:

REVISIONS			
REV.	DESCRIPTION	DATE	APPROVED
A	ECR 8000009338: RELEASE TO PRODUCTION.	27JUL15 L.Z	HV / XIAI
B	ECR 8000009726: ADD BSAMNT-M.	25AUG15 ZY	S.LIU/JIHE
C	ECR 8000010306: ADD DIMENSIONS.	15OCT15 QF	S.LIU/JIHE
D	ECR 8000039485: UPDATE DRAWING WITH LATEST MODEL.	29FEB20 HWW	S.LIU/HANSEN.W
E	ECR 8000042375: UPDATE DRAWING WITH LATEST MODEL.	03SEP20 CN	PL.TANG/HANSEN.W

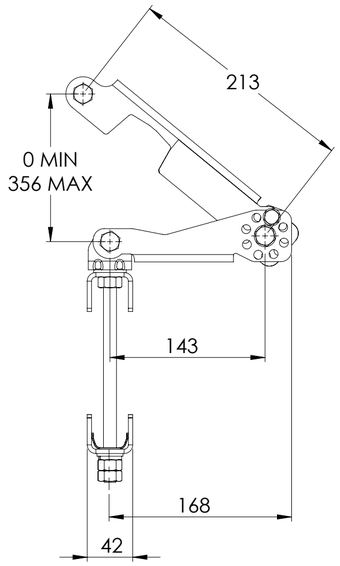

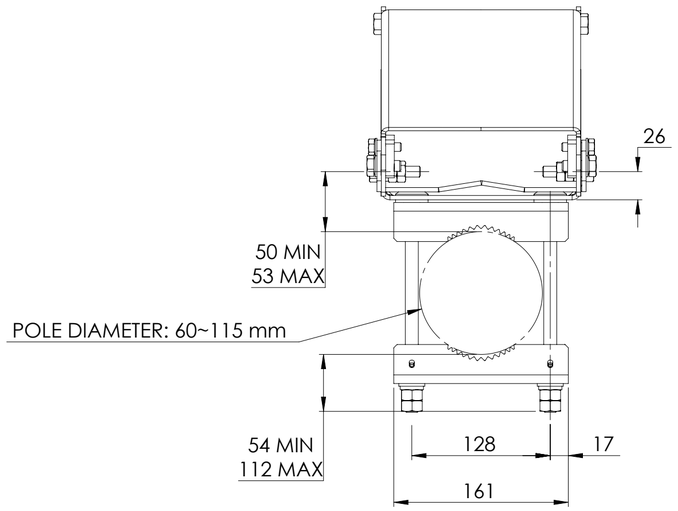

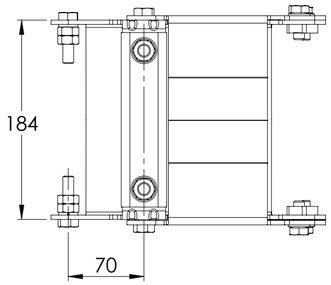

BSAMNT-M
BSAMNT-MH

DENSITY	g/mm³
MASS	Kg
VOLUME	mm³
SURFACE AREA	mm²
HEIGHT	
LENGTH	
WIDTH	

© 2020 CommScope, Inc.

COMMSCOPE, INC. OF NORTH CAROLINA

TOLERANCES
0 PLACE X ± 2 PLACE .XX ±
1 PLACE .X ± ANGLES ±

SAP MATERIAL MASTER

FINISH
N/A

MATERIAL
N/A

UNLESS OTHERWISE SPECIFIED DIMENSIONS ARE IN MILLIMETERS INTERPRET PER ISO STANDARDS HANDBOOK, TECHNICAL DRAWINGS, VOLUMES 1 & 2, THIRD EDITION (2002)

	NAME	DATE
CE	L.Z	27JUL15
RW	NC1020	09/06/2020
RV	PLTANG	09/08/2020
AD	HW8003	09/08/2020
RE	ZHHCHEN	09/09/2020

ECN 8000042375-O

TITLE
PRODUCT DRAWING

SCALE 1:4

DOCUMENT NO. BSAMNT-MH-L

SIZE	WORK AREA	MODEL			DRAWING			SHEET
		VERSION	STATUS	REVISION	VERSION	STATUS	REVISION	
A2	23	04	RE	E	04	RE	E	1 OF 1