L4PNM

Type N Male for 1/2 in LDF4-50A cable

OBSOLETE

This product was discontinued on: May 2, 2012

Replaced By:

L4TNM-PS	Type N Male Positive Stop™ for 1/2 in LDF4-50A cable
L4TNM-PSA	Type N Male Positive Stop™ for 1/2 in AL4RPV-50, LDF4-50A, HL4RPV-50 cable
RL4TNM-PS	Type N Male Positive Stop™ for 1/2 in RXL RADIAX® Radiating cable

Product Classification

Product Type	Wireless and radiating connector
Product Brand	HELIAX®

General Specifications

Body Style	Straight
Cable Family	LDF4-50A
Inner Contact Attachment Method	Solder
Inner Contact Plating	Gold
Interface	N Male
Mounting Angle	Straight
Outer Contact Attachment Method	Self-flare
Outer Contact Plating	Trimetal
Pressurizable	No

Dimensions

Length	65.79 mm | 2.59 in
Diameter	23.11 mm | 0.91 in
Nominal Size	1/2 in

Outline Drawing

©2024 CommScope, Inc. All rights reserved. CommScope and the CommScope logo are registered trademarks of CommScope and/or its affiliates in the U.S. and other countries. For additional trademark information see https://www.commscope.com/trademarks. All product names, trademarks and registered trademarks are property of their respective owners. Revised: July 15, 2024

L4PNM

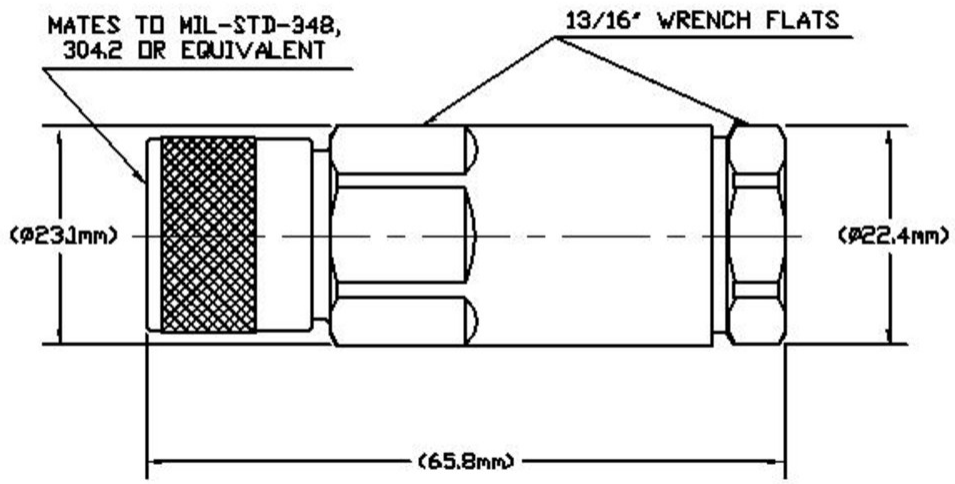

Electrical Specifications

3rd Order IMD at Frequency	-116 dBm @ 910 MHz
3rd Order IMD Test Method	Two +43 dBm carriers
Insertion Loss Coefficient, typical	0.05
Cable Impedance	50 ohm
Connector Impedance	50 ohm
Inner Contact Resistance, maximum	2 mOhm
Operating Frequency Band	0 – 8800 MHz
Outer Contact Resistance, maximum	0.3 mOhm
RF Operating Voltage, maximum (vrms)	707 V

VSWR/Return Loss

Frequency Band	VSWR	Return Loss (dB)
3.5–4.4 GHz	1.152	23.02
45–920 MHz	1.036	35.05
920–2700 MHz	1.058	31
2700–3500 MHz	1.106	25.96
4400–5300 MHz	1.196	20.99
5300–6200 MHz	1.222	20.01
6200–8800 MHz	1.29	18

©2024 CommScope, Inc. All rights reserved. CommScope and the CommScope logo are registered trademarks of CommScope and/or its affiliates in the U.S. and other countries. For additional trademark information see https://www.commscope.com/trademarks. All product names, trademarks and registered trademarks are property of their respective owners. Revised: July 15, 2024

L4PNM

Mechanical Specifications

Attachment Durability	25 cycles
Connector Retention Tensile Force	889.64 N | 200 lbf
Connector Retention Torque	5.42 N-m | 47.998 in lb
Coupling Nut Proof Torque	4.52 N-m | 39.997 in lb
Coupling Nut Retention Force	444.82 N | 100 lbf
Coupling Nut Retention Force Method	MIL-C-39012C-3.25, 4.6.22
Interface Durability	500 cycles
Interface Durability Method	IEC 61169-16:9.5

Environmental Specifications

Attenuation, Ambient Temperature	20 °C | 68 °F
Average Power, Ambient Temperature	40 °C | 104 °F

Packaging and Weights

Weight, net	108.86 g | 0.24 lb

Regulatory Compliance/Certifications

Agency	Classification
CHINA-ROHS	Below maximum concentration value
ROHS	Compliant
UK-ROHS	Compliant

* Footnotes

Insertion Loss Coefficient, typical 0.05√freq (GHz) (not applicable for elliptical waveguide)

©2024 CommScope, Inc. All rights reserved. CommScope and the CommScope logo are registered trademarks of CommScope and/or its affiliates in the U.S. and other countries. For additional trademark information see https://www.commscope.com/trademarks. All product names, trademarks and registered trademarks are property of their respective owners. Revised: July 15, 2024