REVISIONS			
REV.	DESCRIPTION	BY	DATE
A	INITIAL RELEASE	MJP	02/22/2019

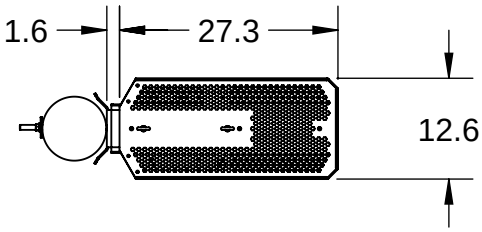

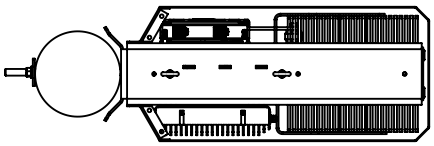

TOP VIEW
(TOP COVER HIDDEN)

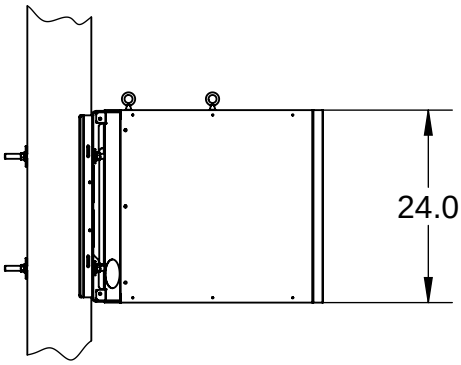

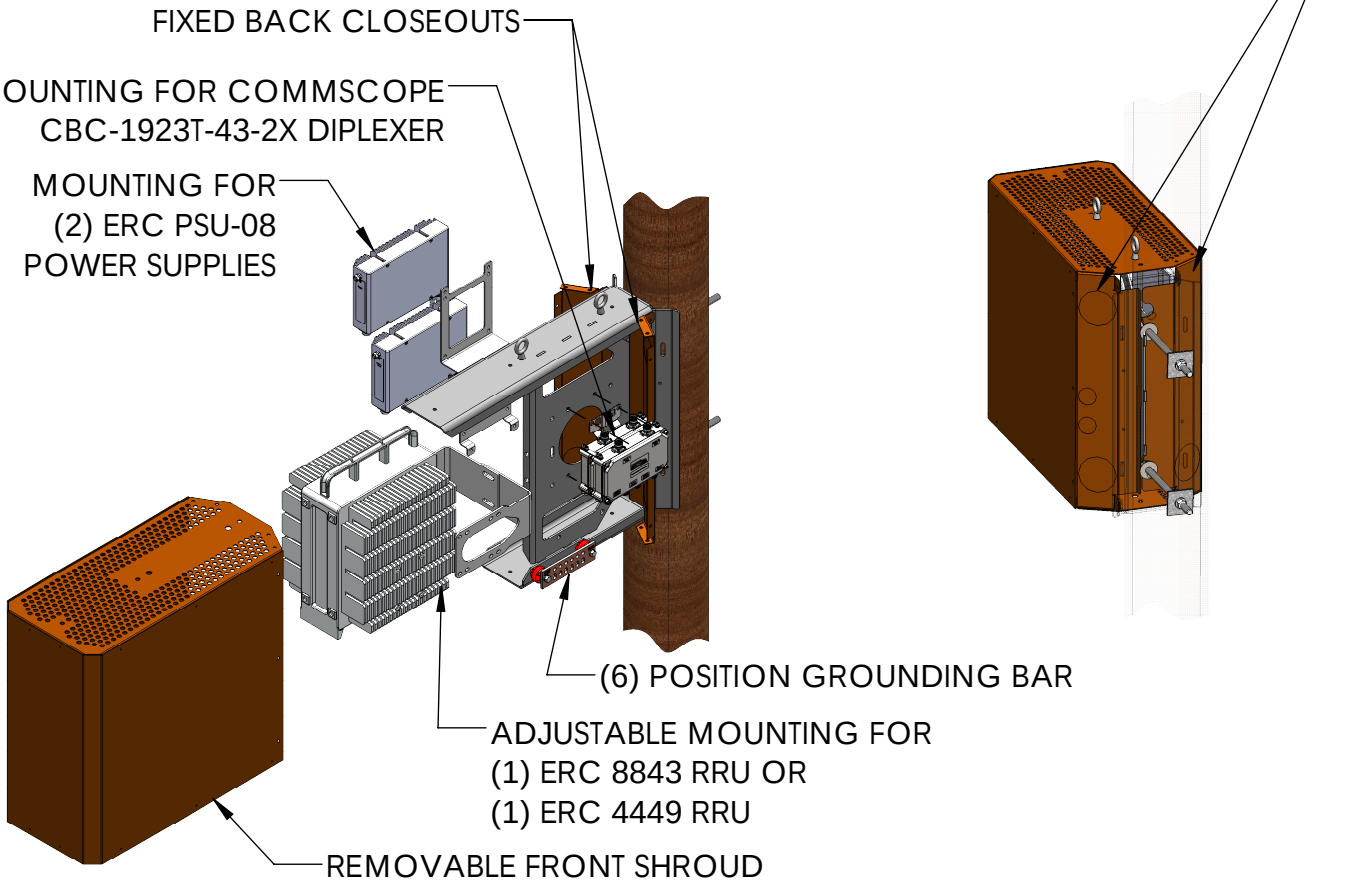

These drawings and specifications are the proprietary property of CommScope Inc. and may be used only for the specific purpose authorized in writing by CommScope Inc.

ALL DIMENSIONS ARE IN INCHES U.O.S.
TOLERANCES UNLESS OTHERWISE SPECIFIED:

.X = Ñ	.12	ANGLES	Ñ2Á
.XX = Ñ	.06	FRACTIONS	Ñ1/32
.XXX= Ñ	.031		

REMOVE BURRS AND BREAK EDGES .005

DO NOT SCALE THIS PRINT

DRAWN BY: MJP	SHEET: 1 of 1	PART NUMBER: SSC760239913
CHECKED BY:	SCALE:	DESCRIPTION: METRO CELL SOLN, WOOD POLE
DATE:	MATERIAL:	DRAWING TYPE:
REVISION: A	FINISH:	COMMSCOPE®
	WEIGHT:	